CHANGE HISTORY			
FILE INDEX	DESCRIPTION	APPROVAL INITIAL	DATE

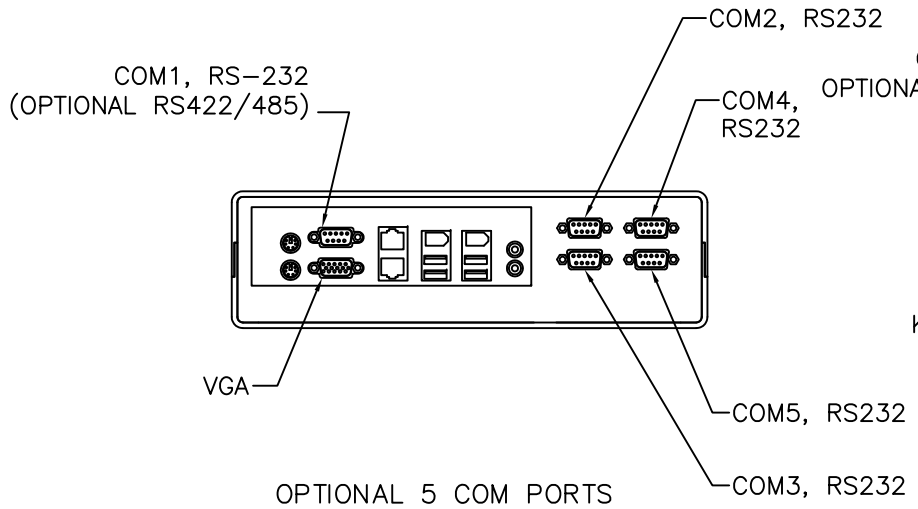

OPTIONAL 5 COM PORTS

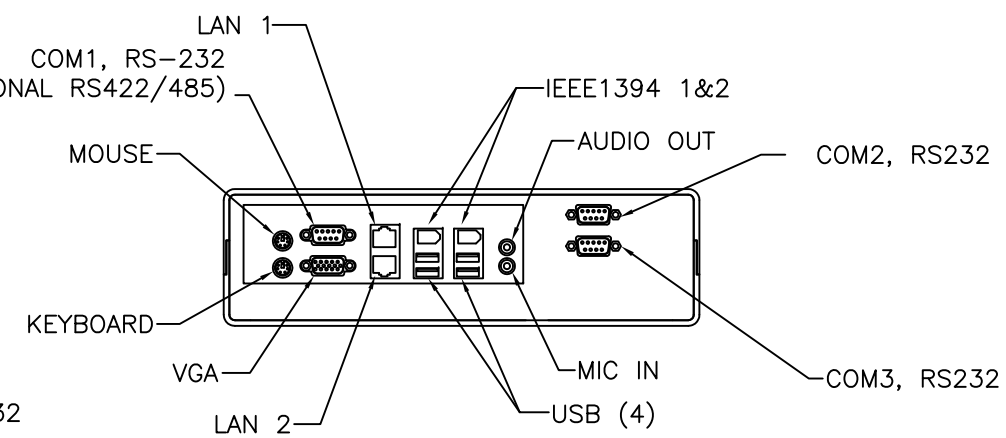

STANDARD CONFIGURATION

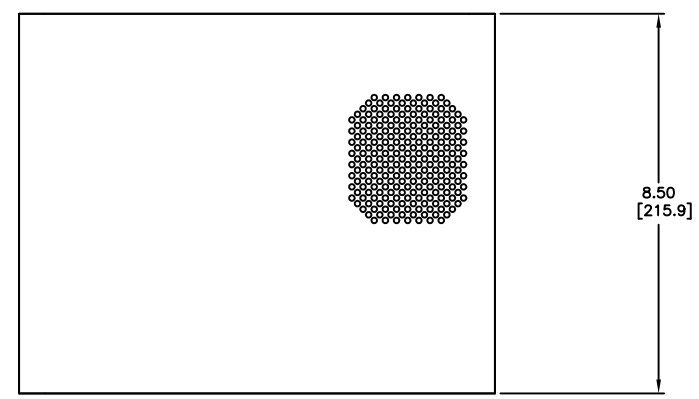

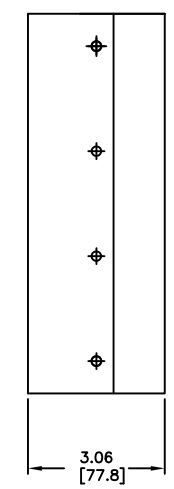

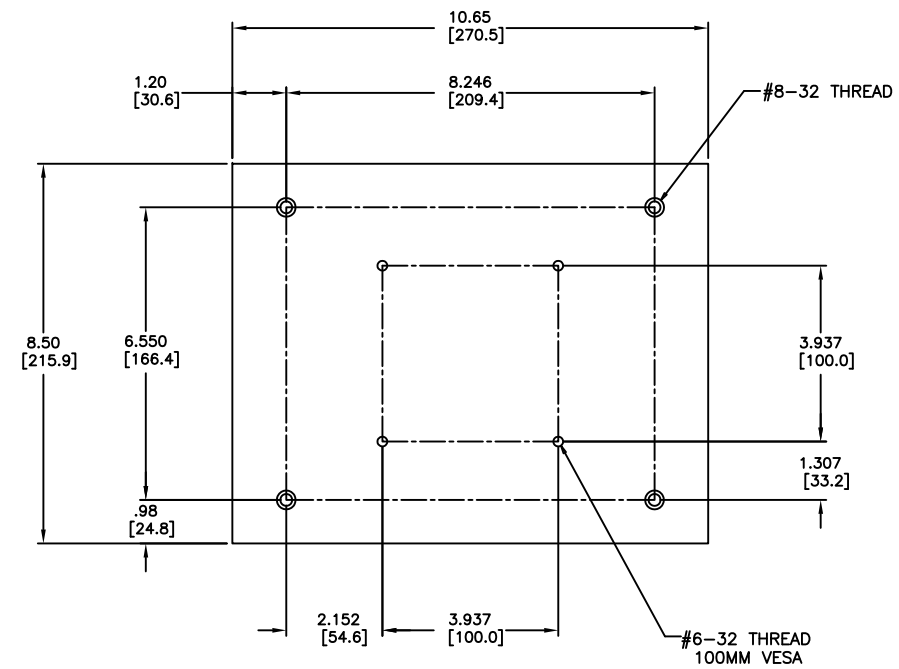

MOUNTING LOCATIONS

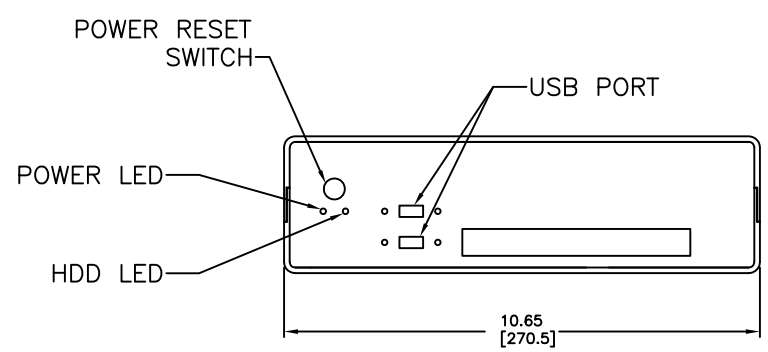

STANDARD CONFIGURATION

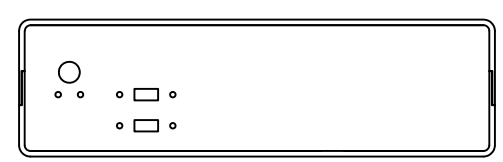

OPTIONAL W/O DVD

ITEM	QTY		MFR. PT.NO.	DESCRIPTION	SYM/NOTE

LIST OF MATERIALS

UNLESS OTHERWISE SPECIFIED DIMENSIONS ARE IN INCHES AND APPLY BEFORE FINISH
SURFACE ROUGHNESS .125
TOLERANCE ON
FRACTIONS ± 1/64 | DECIMALS ±.XX=.02 ±.XXX=.005 | ANGLES ± 1/2°

MATERIAL

FINISH

USED ON

APPLICATION

		DATE
DRAWN	NJM	02/14/2008
CHECKED		
DRAFTING		
ENGINEER		
MANUF		
APPROVED		
QA		

VARTECH SYSTEMS

Power-Cube
UNIVERSAL MOUNT

SIZE D | DWG NO. 482-0010-00 | REV 03

SCALE | SHEET 1 OF 1

FILE NUMBER: