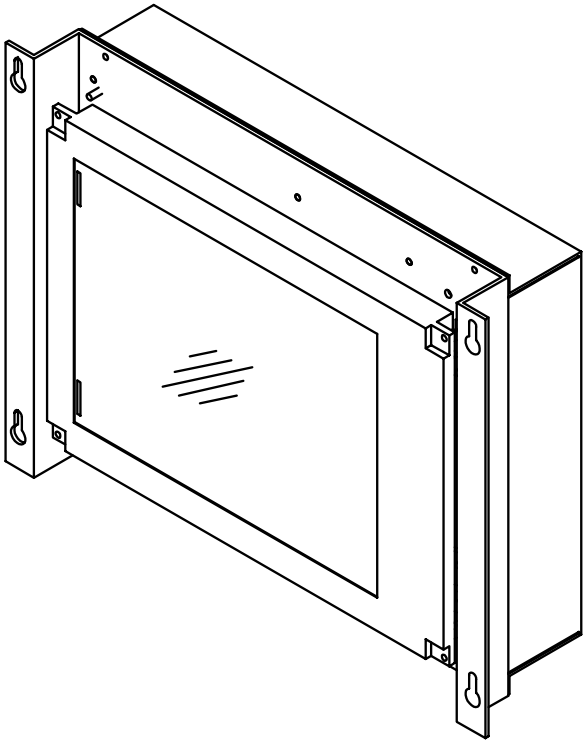

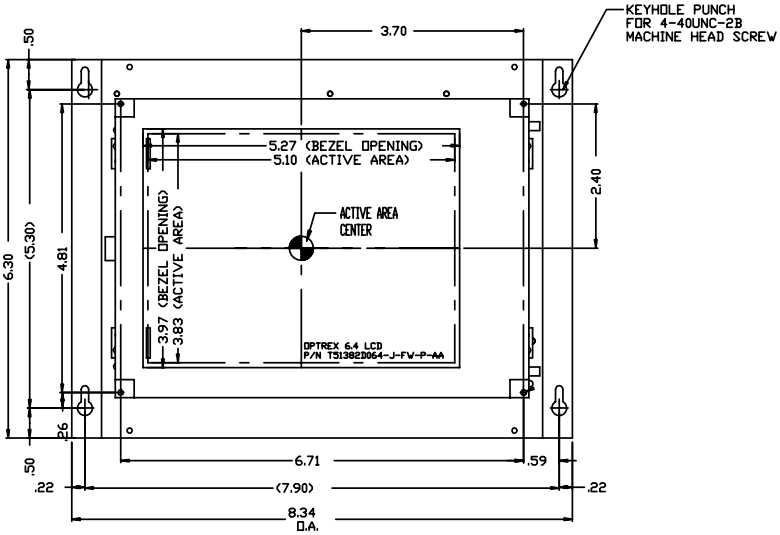

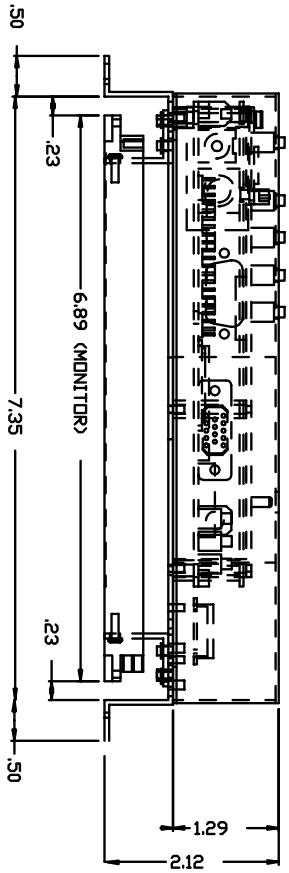

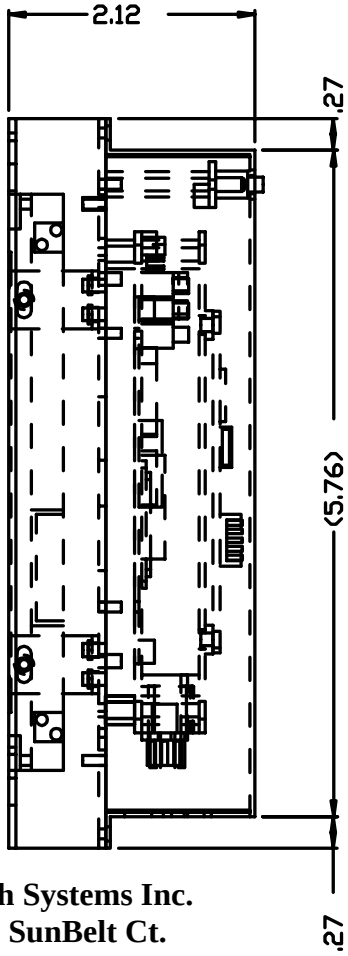

VT064C
6.4" Chassis Mount Flat Panel Display

VarTech Systems Inc.
11529 SunBelt Ct.
Baton Rouge, LA 70809