CHANGE HISTORY			
FILE INDEX	DESCRIPTION	APPROVAL INITIAL	DATE

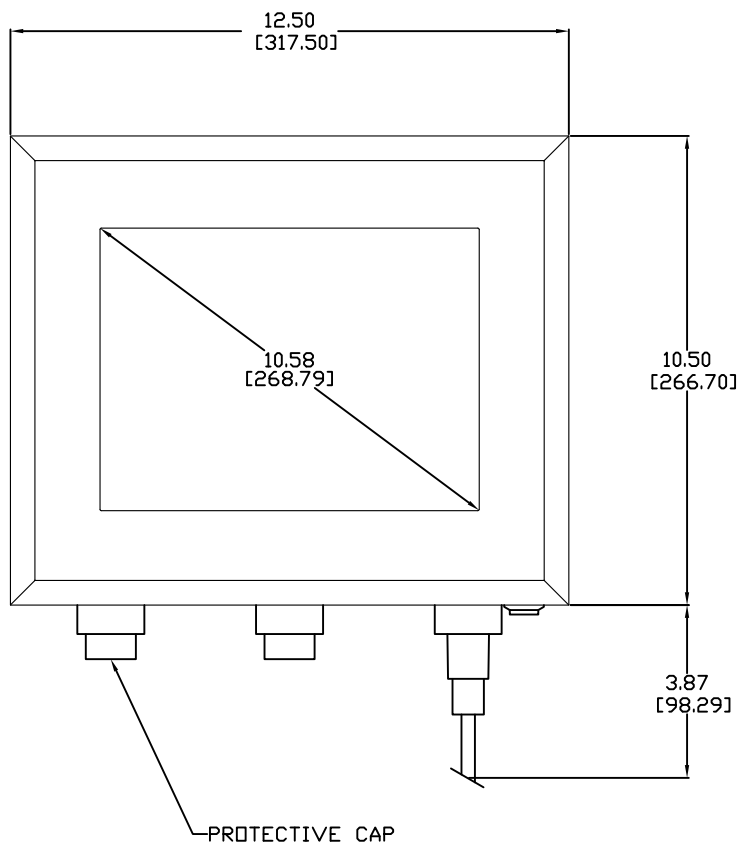

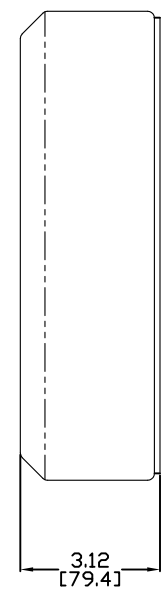

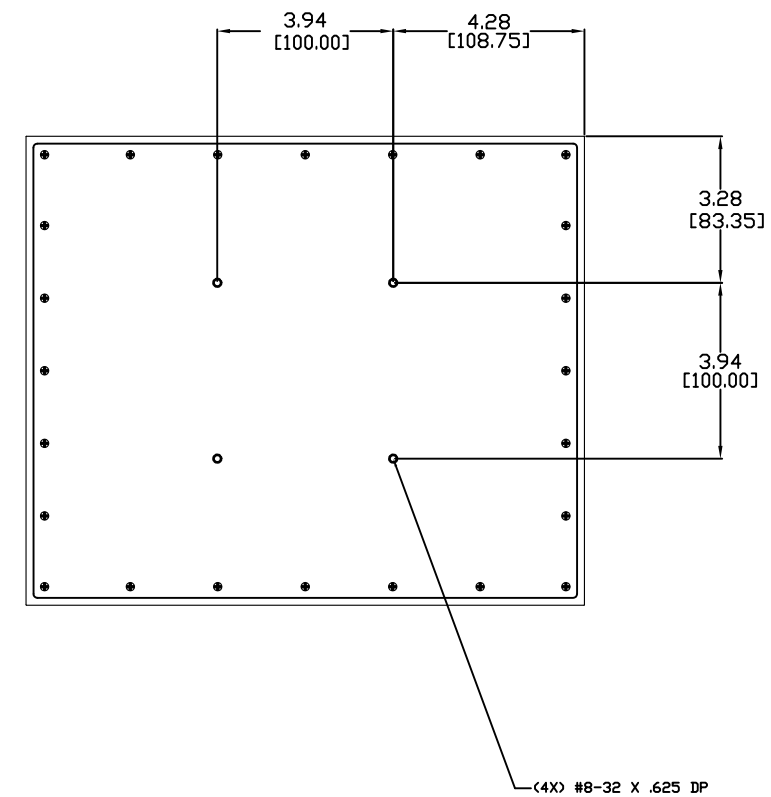

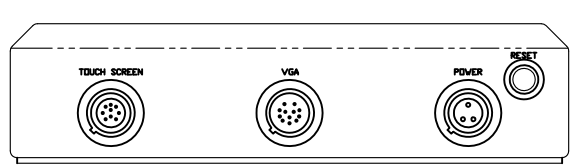

ITEM	QTY		MFR. PT.NO.	DESCRIPTION	SYM/NOTE

LIST OF MATERIALS

UNLESS OTHERWISE SPECIFIED DIMENSIONS ARE IN INCHES AND APPLY BEFORE FINISH
SURFACE ROUGHNESS .125
TOLERANCE ON
FRACTIONS ± 1/64 | DECIMALS ±.XX=.02 ±.XXX=.005 | ANGLES ± 1°/2

MATERIAL

FINISH

USED ON

APPLICATION

DRAWN NJM	DATE 03/03/09	
CHECKED		
DRAFTING		
ENGINEER		
MANUF		
APPROVED		
QA		

VARTECH SYSTEMS

10.4" VT104VS
W/ TOUCH SCREEN

SIZE	DWG NO.	REV
D	482-0039-00	00

SCALE 1:1 SHEET 1 OF 1

FILE NUMBER: 482-0039-00-00