| CHANGE HISTORY | | | |
|---|---|---|---|
| FILE INDEX | DESCRIPTION | APPROVAL INITIAL | APPROVAL DATE |
| 1 | PRELIMINARY RELEASE | | |

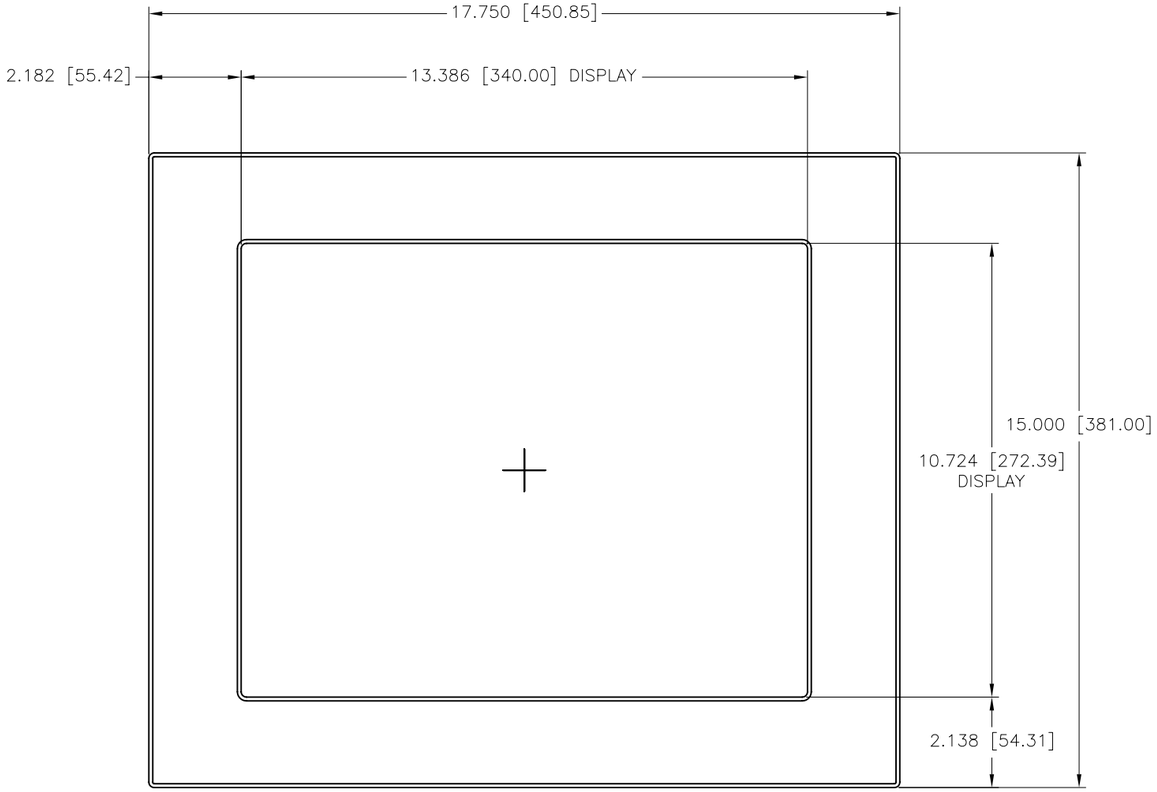


FRONT VIEW

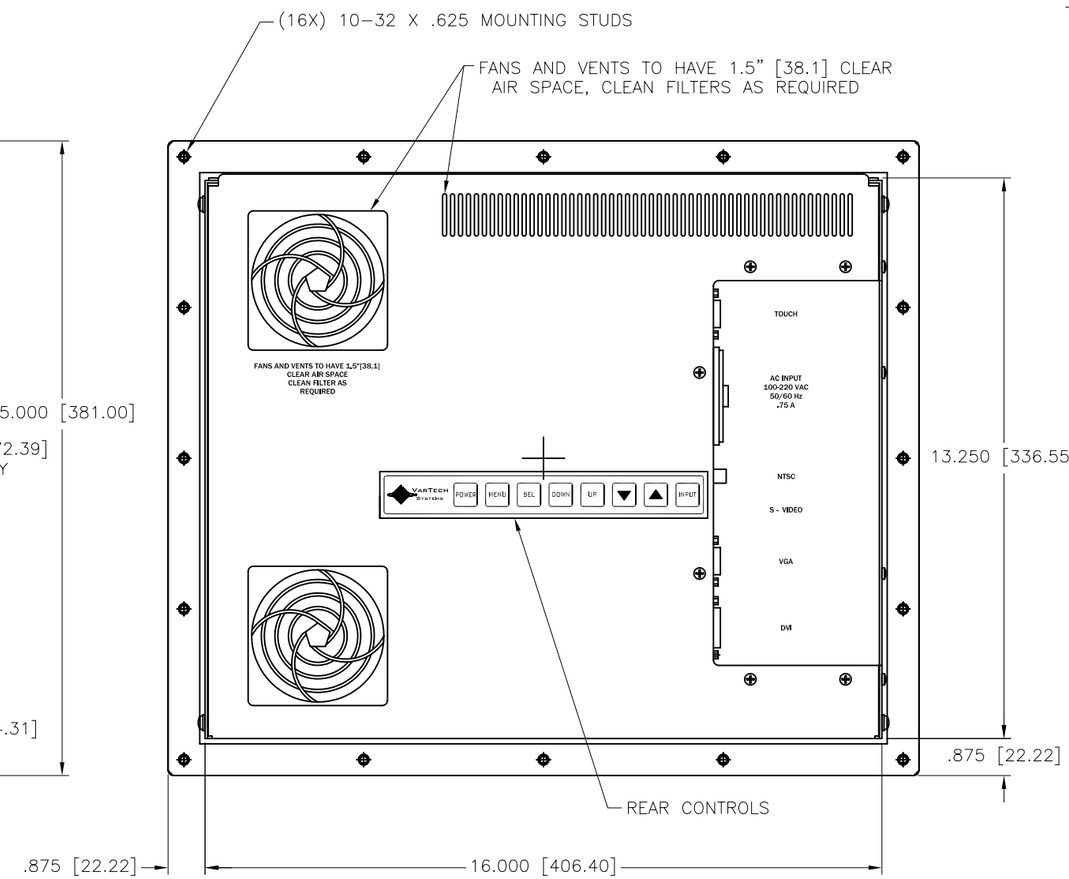


REAR VIEW

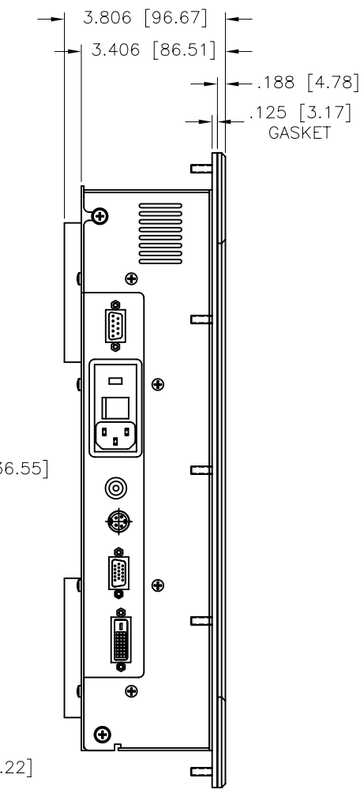


CONNECTOR VIEW

NOTES:

1. ALL DIMENSIONS ARE NOMINAL AND FOR REFERENCE ONLY. THIS DRAWING SHOULD NOT BE USED FOR DESIGN PURPOSES.
2. WEIGHT OF UNIT IS 24 LBS.
3. SHIPPING WEIGHT OF UNIT IS 29 LBS.

| ITEM | QTY | | MFR. PT.NO. | DESCRIPTION | SYM/NOTE |
|---|---|---|---|---|---|

LIST OF MATERIALS

UNLESS OTHERWISE SPECIFIED DIMENSIONS ARE IN INCHES AND APPLY BEFORE FINISH
SURFACE ROUGHNESS .125
TOLERANCE ON

| FRACTIONS | DECIMALS | ANGLES |
|---|---|---|
| ± 1/64 | ±.XX=.02 ±.XXX=.005 | ± 1/2° |

MATERIAL

FINISH

VT170PHBU (SS)
USED ON
APPLICATION

| | | DATE |
|---|---|---|
| DRAWN | DMS | 12/19/05 |
| CHECKED | | |
| DRAFTING | | |
| ENGINEER | | |
| MANUF | | |
| APPROVED | | |
| QA | | |

VARTECH SYSTEMS

OUTLINE DRAWING
VT170PHBU (SS)

| SIZE | DWG NO. | REV |
|---|---|---|
| D | 601-0204 | 1 |

SCALE 1 : 1.75 SHEET 1 OF 2

FILE NUMBER: 6010204A-R1

| CHANGE HISTORY | | | |
|---|---|---|---|
| FILE INDEX | DESCRIPTION | APPROVAL INITIAL | DATE |
| 1 | PRELIMINARY RELEASE | | |

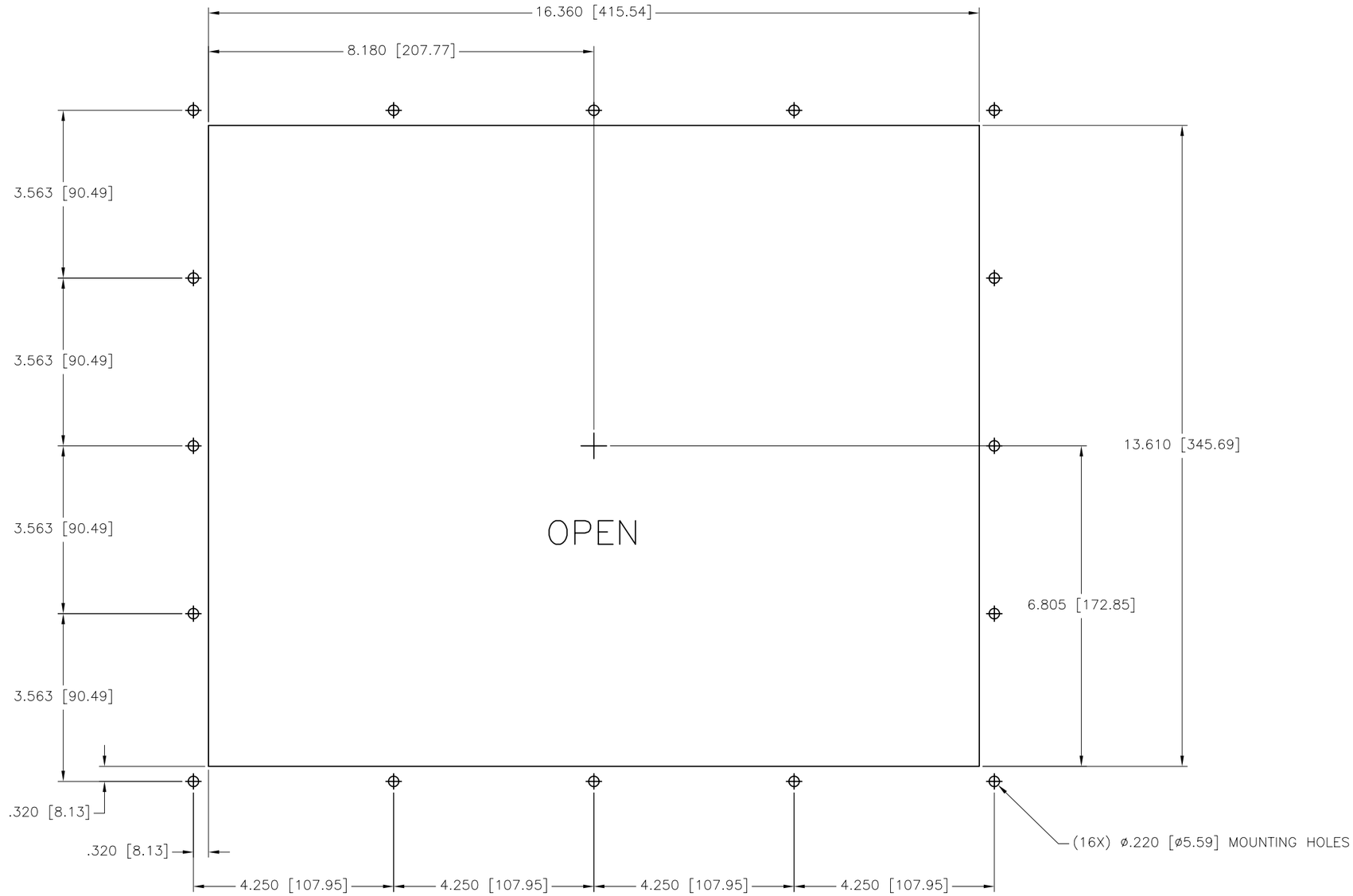


PANEL CUTOUT

| ITEM | QTY | | MFR. PT.NO. | DESCRIPTION | SYM/NOTE |
|---|---|---|---|---|---|

LIST OF MATERIALS

UNLESS OTHERWISE SPECIFIED DIMENSIONS ARE IN INCHES AND APPLY BEFORE FINISH
SURFACE ROUGHNESS .125
TOLERANCE ON
FRACTIONS ± 1/64 | DECIMALS ±.XX=.02 ±.XXX=.005 | ANGLES ± 1/2°

MATERIAL

FINISH

VT170PHBU (SS)
USED ON
APPLICATION

| | | DATE |
|---|---|---|
| DRAWN | DMS | 12/19/05 |
| CHECKED | | |
| DRAFTING | | |
| ENGINEER | | |
| MANUF | | |
| APPROVED | | |
| QA | | |

VARTECH SYSTEMS

OUTLINE DRAWING
VT170PHBU (SS)

| SIZE | DWG NO. | REV |
|---|---|---|
| D | 601-0204 | 1 |

SCALE 1 : 1.25 | SHEET 2 OF 2

FILE NUMBER: 6010204B-R1