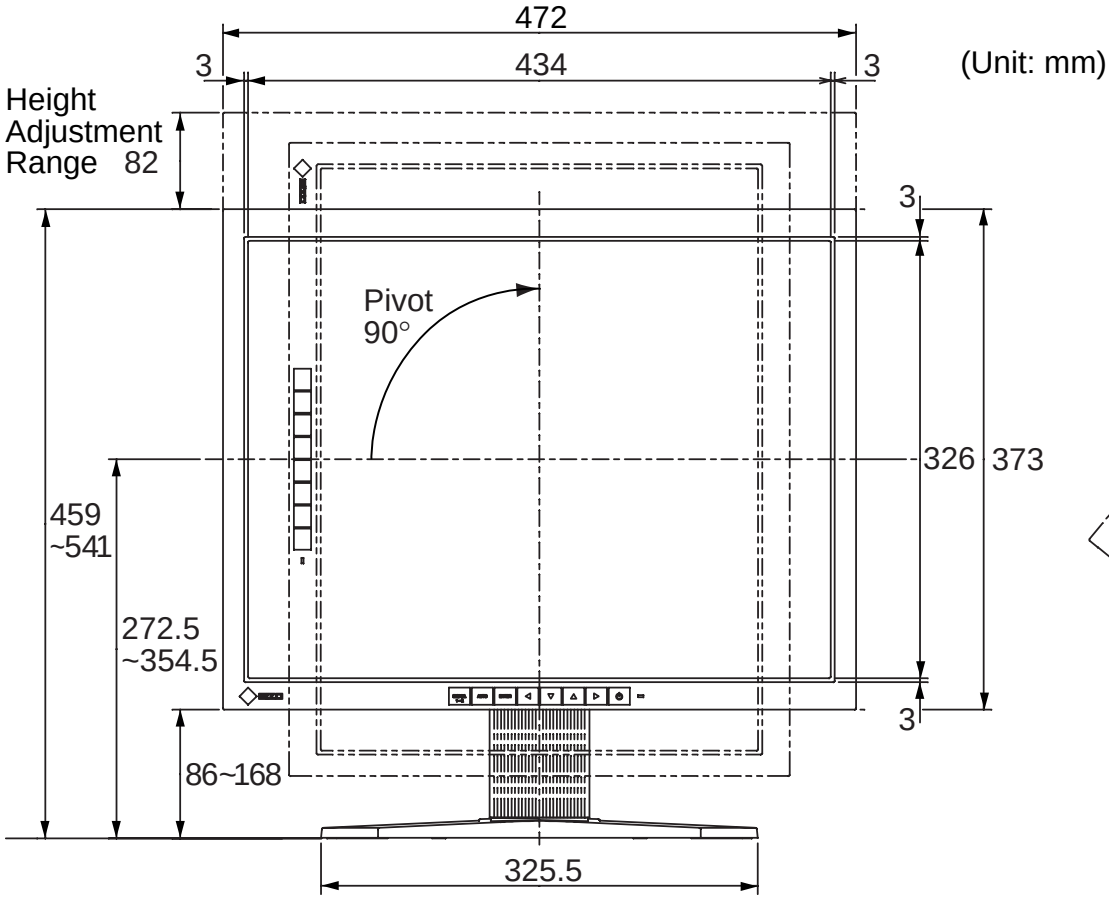

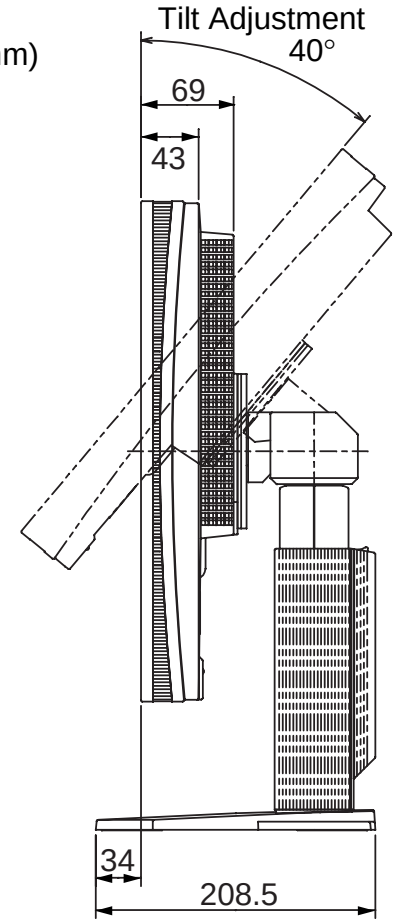

VT213D

VarTech Systems Inc.