CHANGE HISTORY			
FILE INDEX	DESCRIPTION	APPROVAL INITIAL	DATE

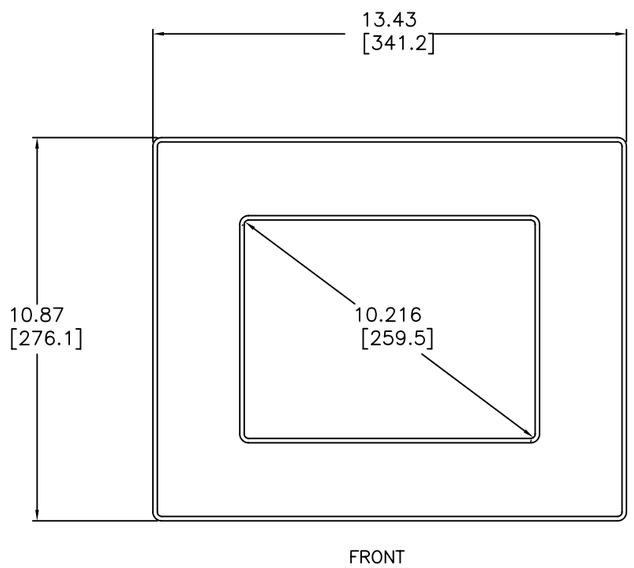

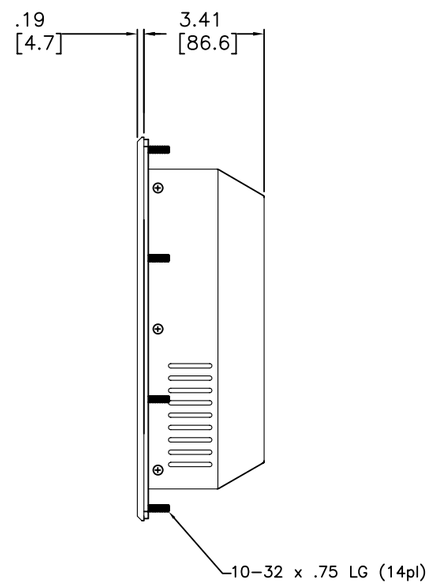

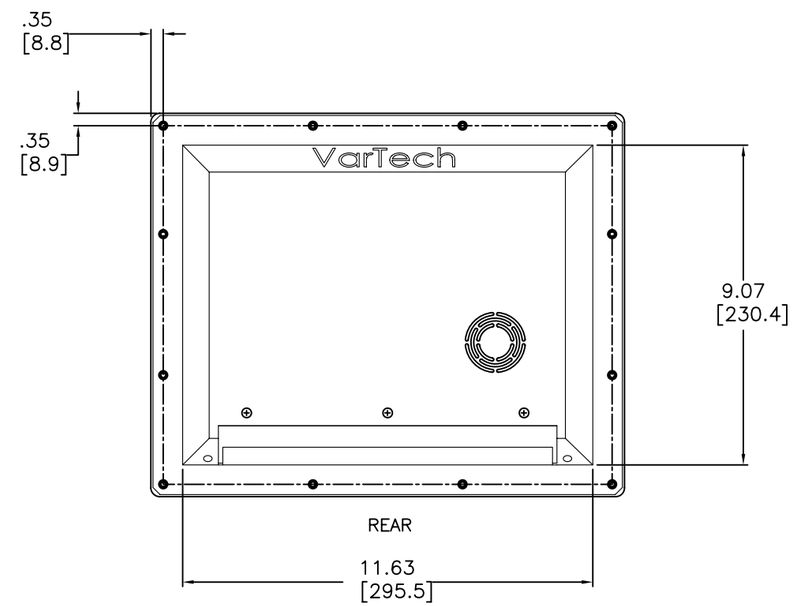

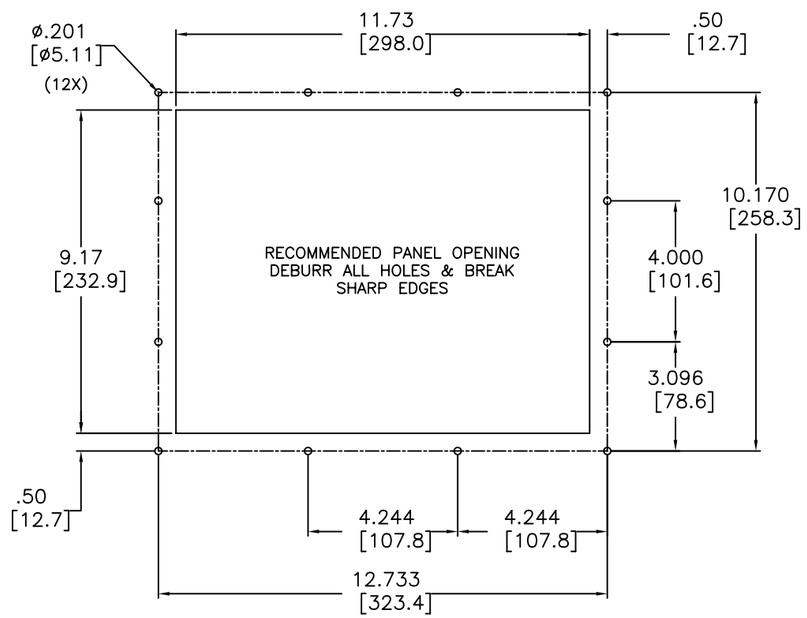

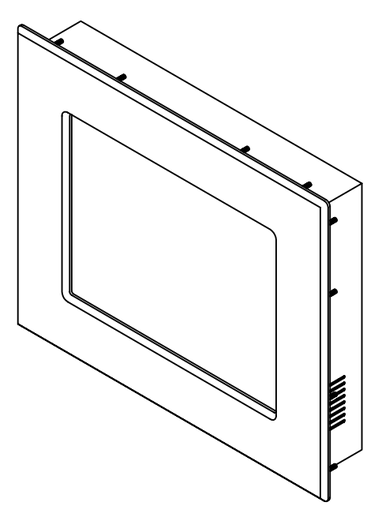

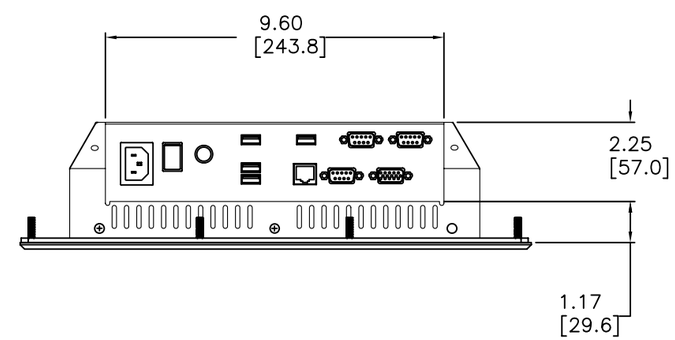

ITEM	QTY		MFR. PT.NO.	DESCRIPTION	SYM/NOTE

LIST OF MATERIALS

UNLESS OTHERWISE SPECIFIED DIMENSIONS ARE IN INCHES AND APPLY BEFORE FINISH
SURFACE ROUGHNESS .125
TOLERANCE ON
FRACTIONS ± 1/64 | DECIMALS .XX=.02 ±.XXX=.005 | ANGLES ± 1/2°

MATERIAL

FINISH

USED ON	
VTPC104PSSHB	
VTPC104PSS	
APPLICATION	

	DATE
DRAWN NM	09/02/2008
CHECKED	
DRAFTING	
ENGINEER	
MANUF	
APPROVED	
QA	

VARTECH SYSTEMS

10.4"Panel Mount Computer
VTPC104PSS-PSSHB

SIZE	DWG NO.	REV
D	482-0032-02	02

SCALE | SHEET 1 OF 1

FILE NUMBER: 482-0032-02-02