CHANGE HISTORY			
FILE INDEX	DESCRIPTION	APPROVAL INITIAL	DATE
03	ADD TABULATION FOR PCI PORT DIMENSIONS	MLC	1/5/09
04	REVISED MOTHERBOARD		

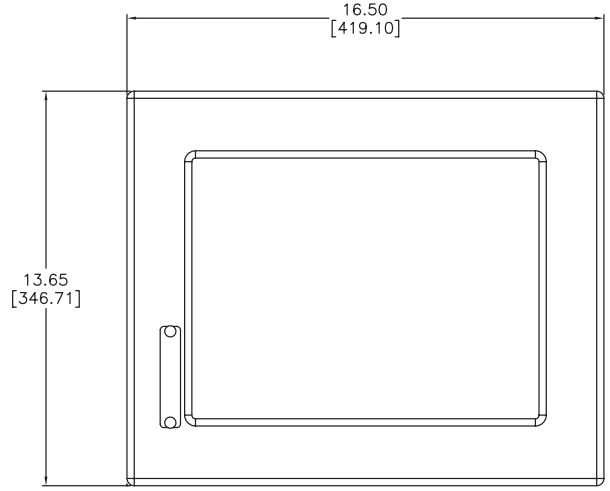

FRONT

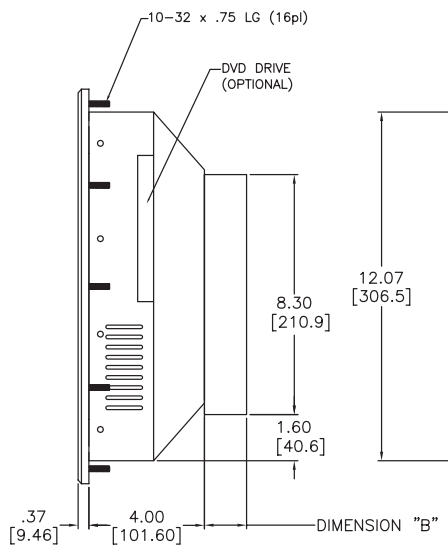

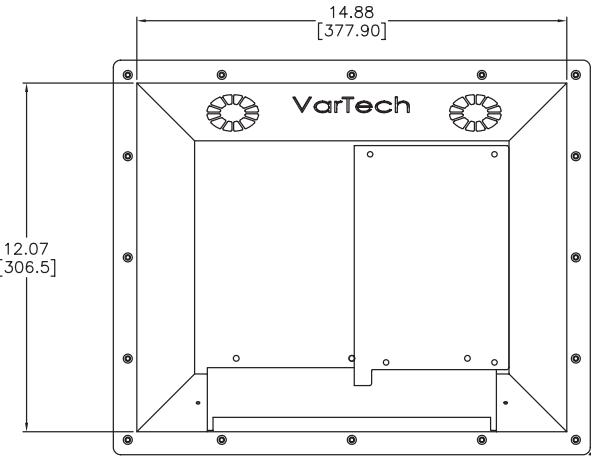

REAR

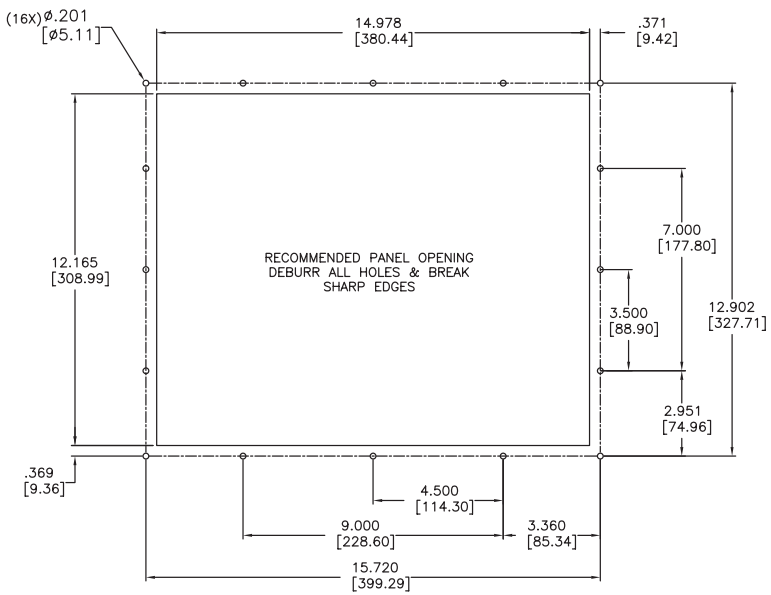

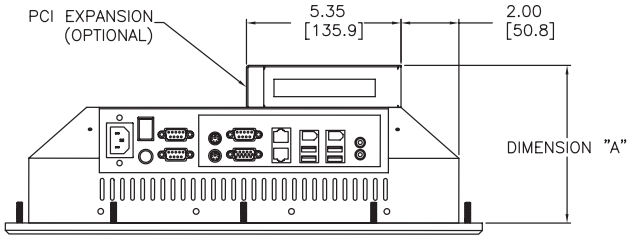

ITEM	QTY		MFR. PT.NO.	DESCRIPTION	SYM/NOTE

LIST OF MATERIALS

UNLESS OTHERWISE SPECIFIED DIMENSIONS ARE IN INCHES AND APPLY BEFORE FINISH
SURFACE ROUGHNESS .125
TOLERANCE ON
FRACTIONS ± 1/64 | DECIMALS ±.XX=.02 ±.XXX=.005 | ANGLES ± 1/2°

MATERIAL

FINISH

VTPC150P
USED ON
APPLICATION

DRAWN MLC DATE 8/26/08
CHECKED
DRAFTING
ENGINEER
MANUF
APPROVED
QA

VARTECH SYSTEMS

15"Panel Mount Computer
VTPC150P-K

SIZE D | DWG NO. 482-0016-01 | REV 04

SCALE | SHEET 1 OF 1

FILE NUMBER: 482-0016-01-04