| CHANGE HISTORY | | | |
|---|---|---|---|
| FILE INDEX | DESCRIPTION | APPROVAL INITIAL | APPROVAL DATE |
| 01 | REVISED TO SHOW 4" DEPTH & PORT PANEL | MLC | 8/27 08 |
| 02 | ADD TABULATION FOR PCI DIMENSIONS | MLC | 1/5 09 |

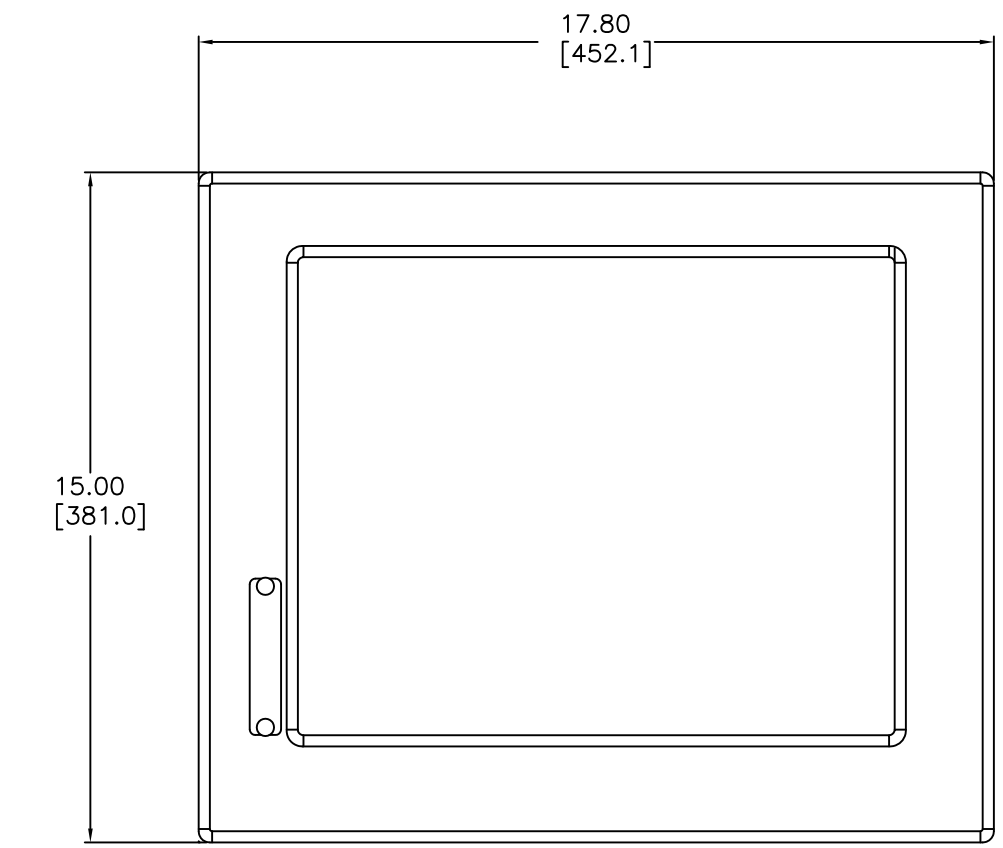


FRONT

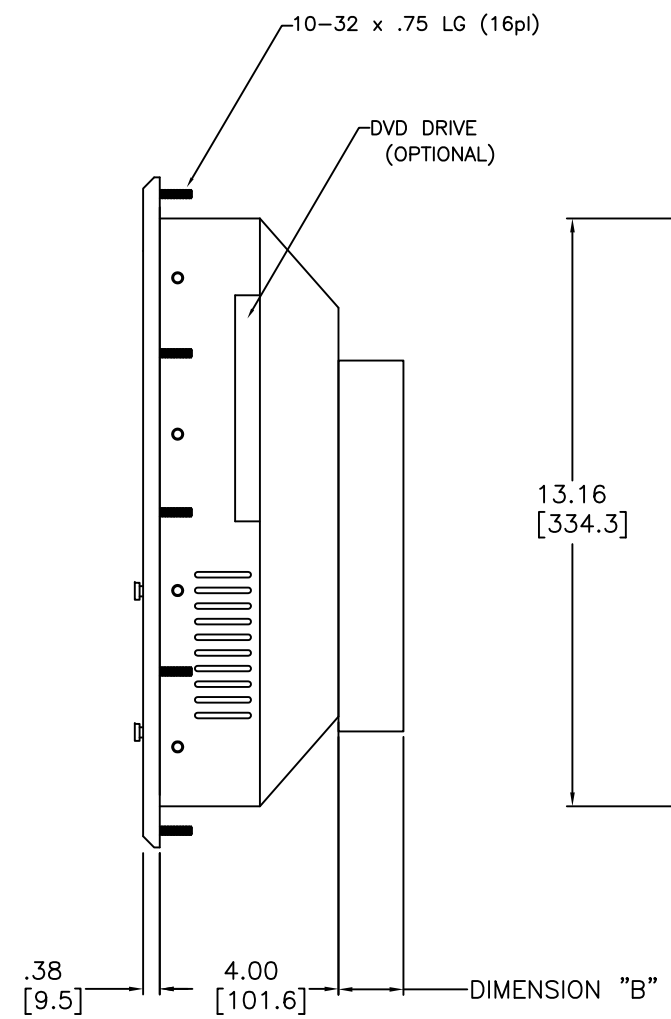


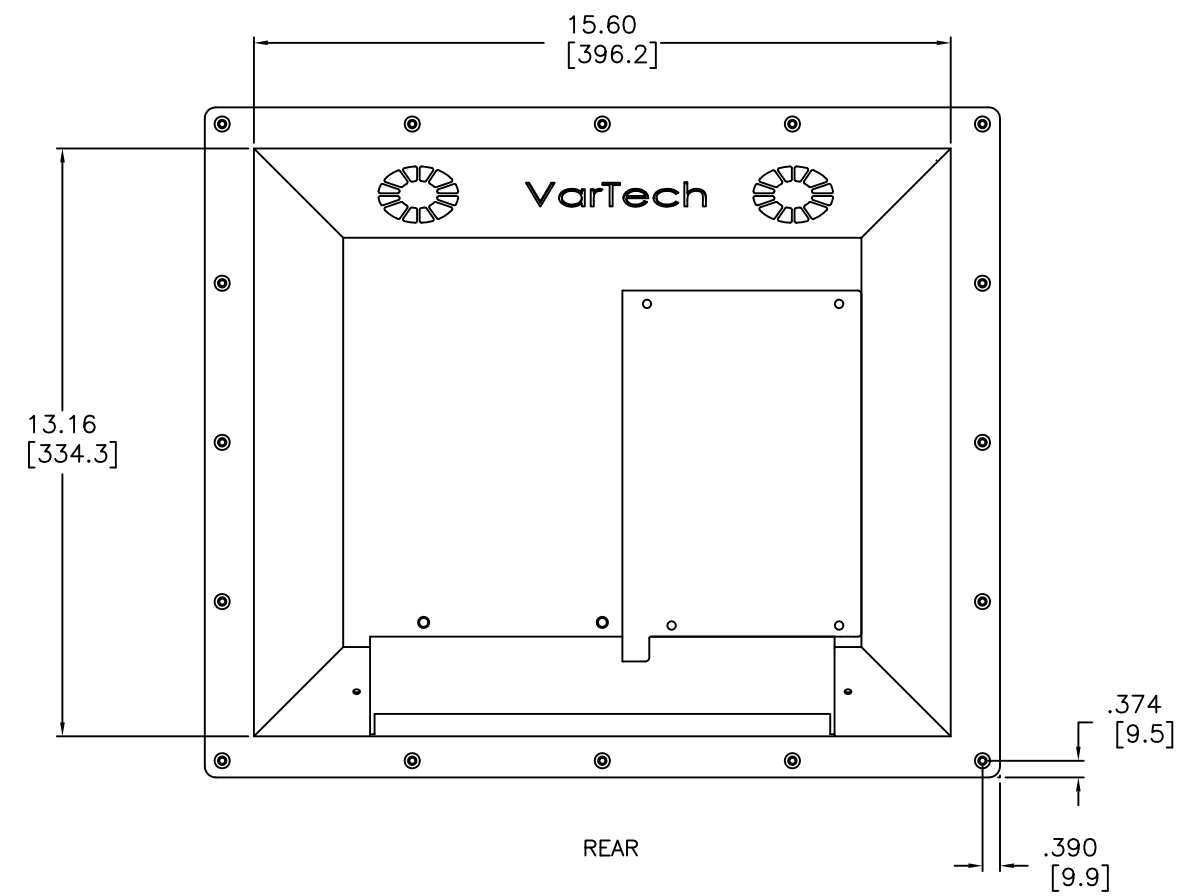


REAR

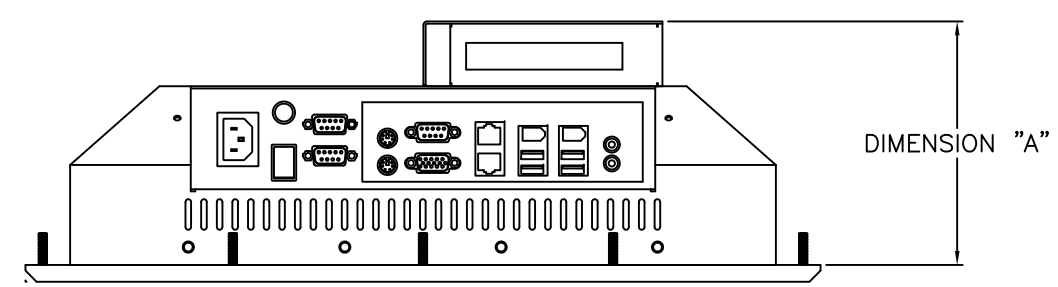


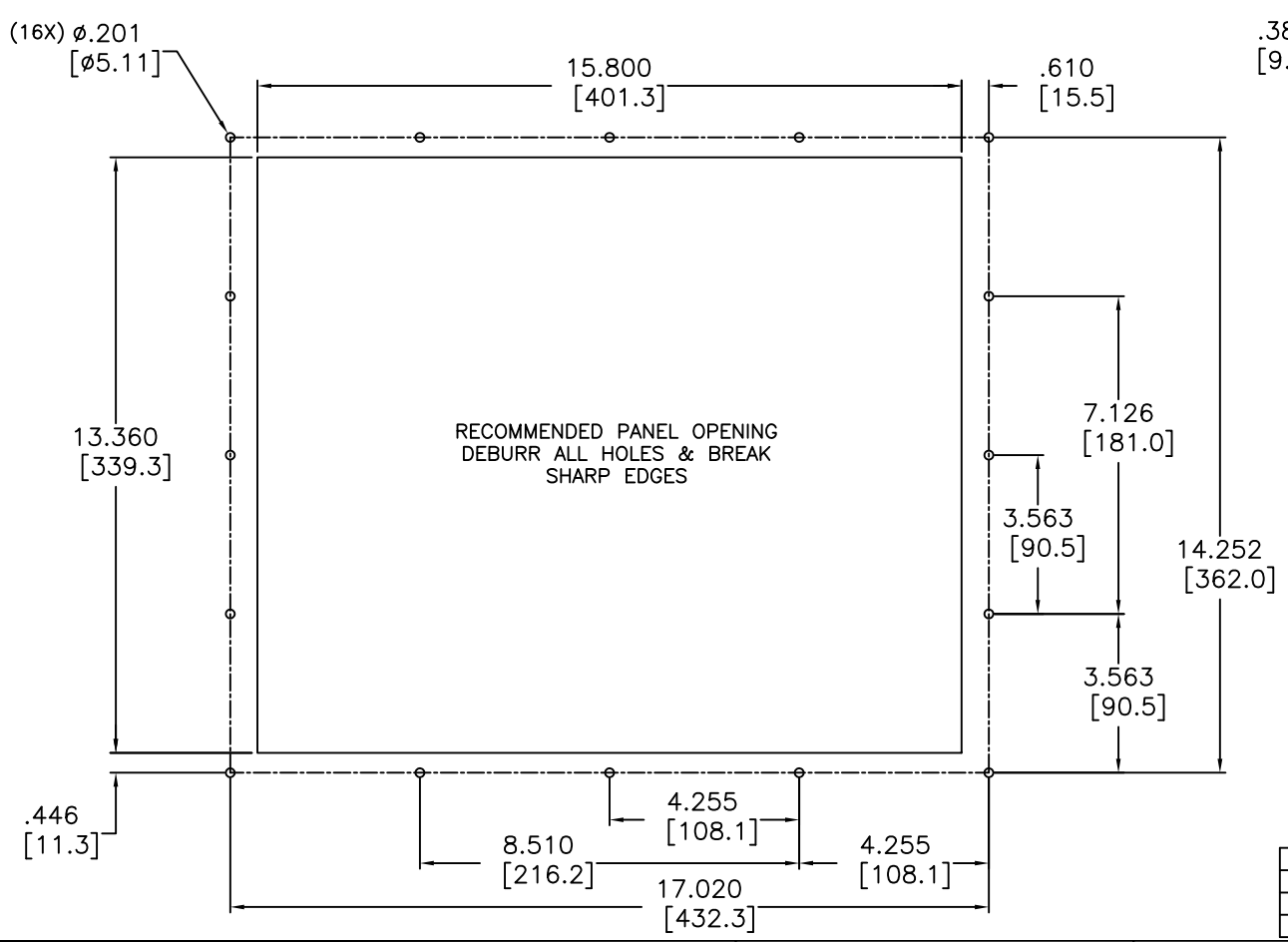


| NUMBER OF PCI PORTS | DIMENSION "A" | DIMENSION "B" |
|---|---|---|
| 3 PORTS | 7.40" (187.8mm) | 3.40" (86.2mm) |
| 2 PORTS | 6.61" (167.8mm) | 2.61" (66.3mm) |
| 1 PORT | 5.12" (130.0mm) | 1.12" (28.5mm) |

| ITEM | QTY | | MFR. PT.NO. | DESCRIPTION | SYM/NOTE |
|---|---|---|---|---|---|

LIST OF MATERIALS

UNLESS OTHERWISE SPECIFIED DIMENSIONS ARE IN INCHES AND APPLY BEFORE FINISH
SURFACE ROUGHNESS .125
TOLERANCE ON
FRACTIONS ± 1/64 | DECIMALS .XX=.02 ±.XXX=.005 | ANGLES ± 1/2°

MATERIAL

FINISH

VTPC170P USED ON APPLICATION

| | | DATE |
|---|---|---|
| DRAWN | NM | 03/12/2008 |
| CHECKED | | |
| DRAFTING | | |
| ENGINEER | | |
| MANUF | | |
| APPROVED | | |
| QA | | |

VARTECH SYSTEMS

17"Panel Mount Computer
VTPC170P-K

SIZE D | DWG NO. 482-0018-01 | REV 03

SCALE | SHEET 1 OF 1

FILE NUMBER:
482-0018-0X VTPC170P-K_PSS-K 1