CHANGE HISTORY			
FILE INDEX	DESCRIPTION	APPROVAL INITIAL	DATE

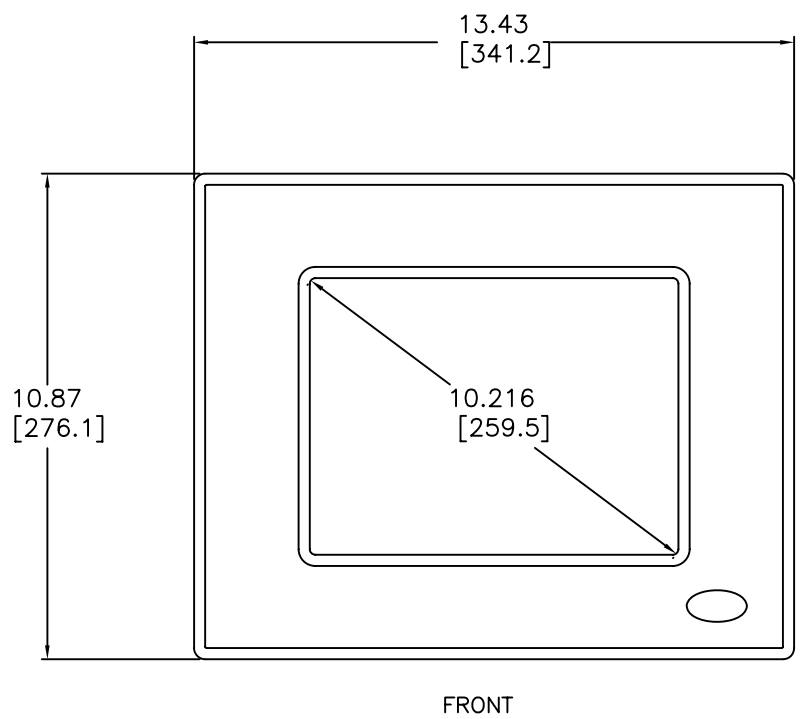

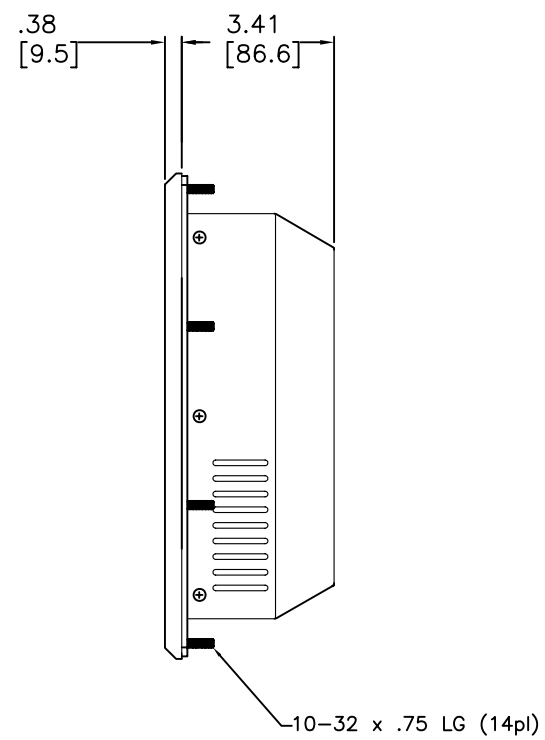

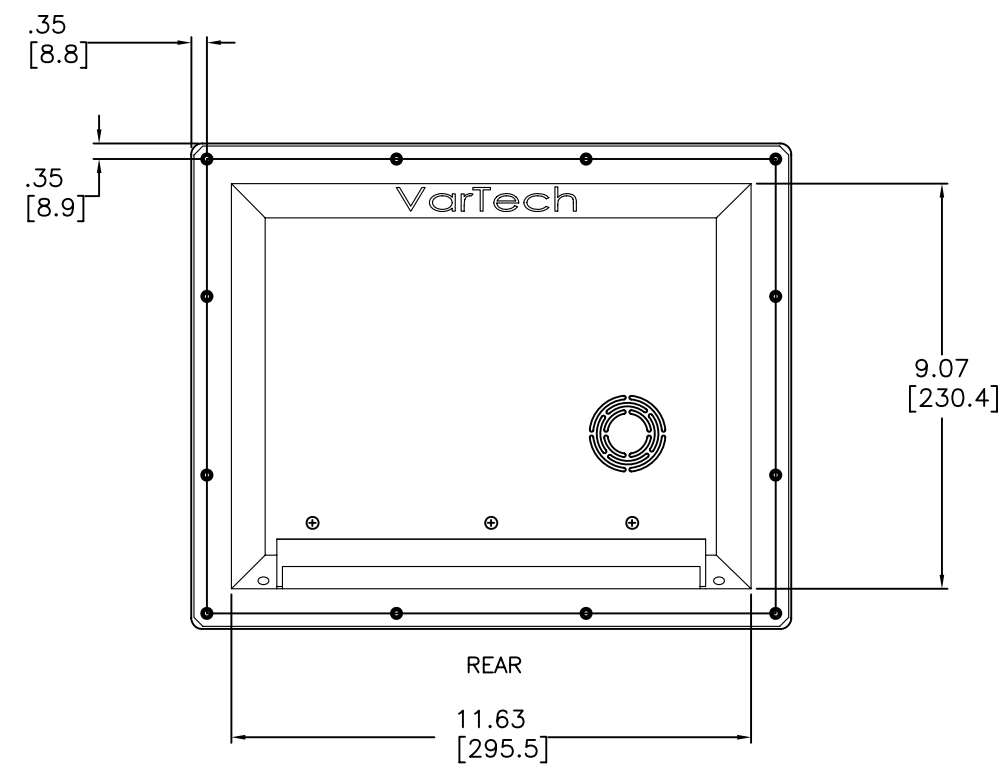

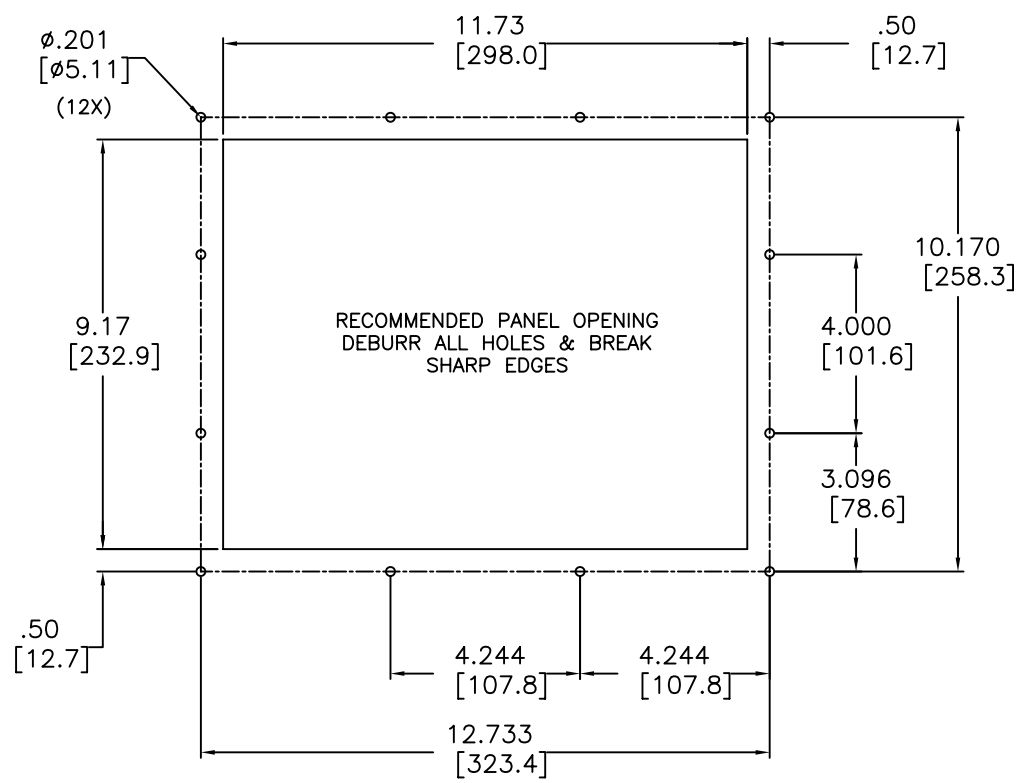

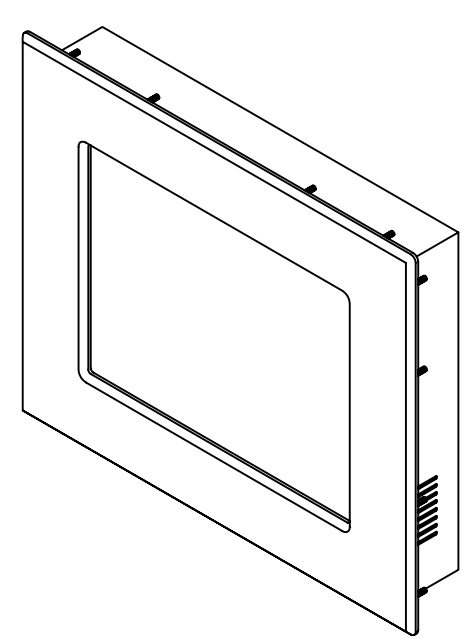

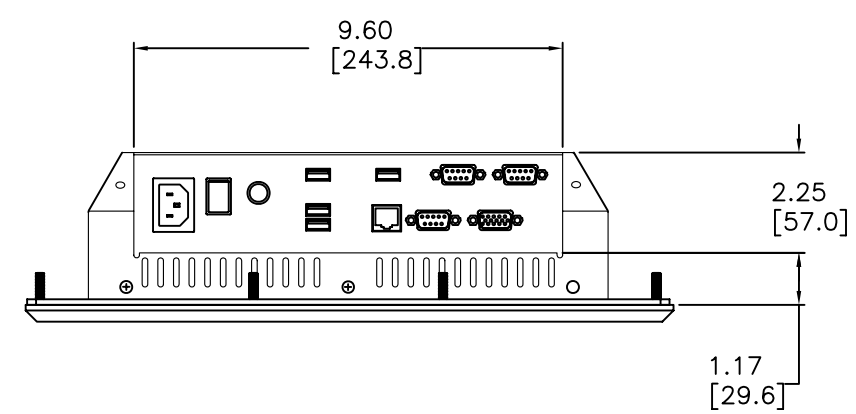

ITEM	QTY		MFR. PT.NO.	DESCRIPTION	SYM/NOTE

LIST OF MATERIALS

UNLESS OTHERWISE SPECIFIED DIMENSIONS ARE IN INCHES AND APPLY BEFORE FINISH
SURFACE ROUGHNESS .125
TOLERANCE ON
FRACTIONS ± 1/64 | DECIMALS ±.XX=.02 ±.XXX=.005 | ANGLES ± 1/2°

MATERIAL

FINISH

VTPC104PHB	
VTPC104P	
USED ON	
APPLICATION	

		DATE
DRAWN	NM	09/02/2008
CHECKED		
DRAFTING		
ENGINEER		
MANUF		
APPROVED		
QA		

VARTECH SYSTEMS

10.4"Panel Mount Computer
VTPC104P-PHB

SIZE	DWG NO.	REV
D	482-0032-01	02

SCALE | SHEET 1 OF 1

FILE NUMBER: 482-0032-01-02