CHANGE HISTORY			
FILE INDEX	DESCRIPTION	APPROVAL INITIAL	DATE

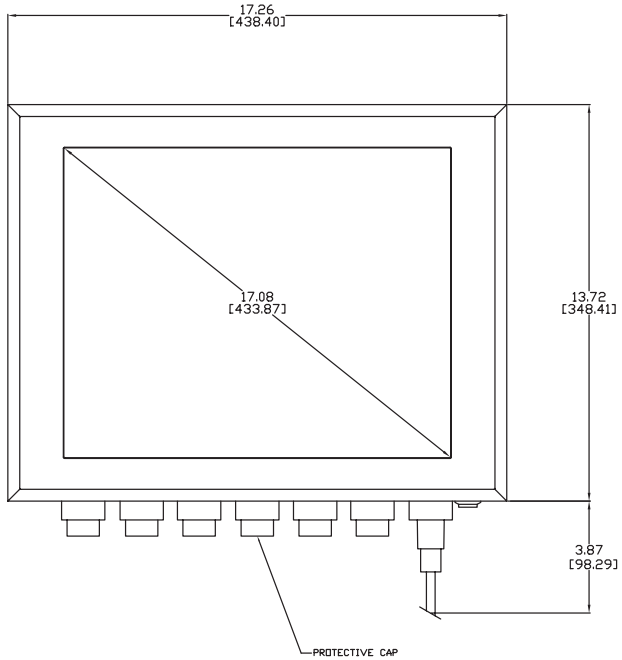

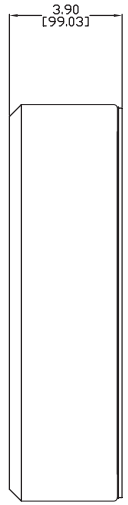

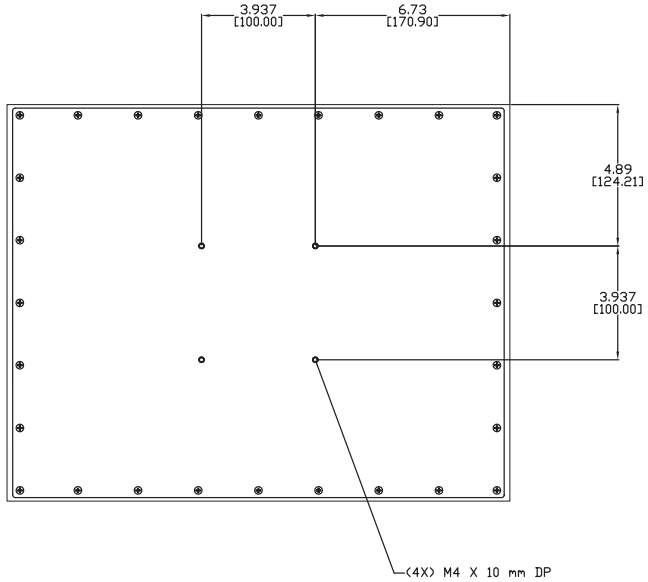

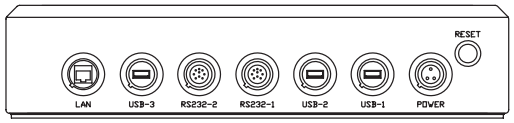

ITEM	QTY		MFR. PT.NO.	DESCRIPTION	SYM/NOTE
LIST OF MATERIALS					

UNLESS OTHERWISE SPECIFIED DIMENSIONS ARE IN INCHES AND APPLY BEFORE FINISH
SURFACE ROUGHNESS .125
TOLERANCE ON
FRACTIONS ± 1/64 | DECIMALS ±.XX=.02 ±.XXX=.005 | ANGLES ± 1/2°

MATERIAL

FINISH

USED ON

APPLICATION

DRAWN NJM	DATE 07/16/09
CHECKED	
DRAFTING	
ENGINEER	
MANUF	
APPROVED	
QA	

VARTECH SYSTEMS

VTPC170VA-VSA
17.0 FULLY-ENCLOSED

SIZE	DWG NO.	REV
D	482-0029-01	00

SCALE 1:1 SHEET 1 OF 1

FILE NUMBER: 482-0029-01-00